GIT

TOP SINGLE/DUAL AXIS INCLINOMETER (XY/360°)

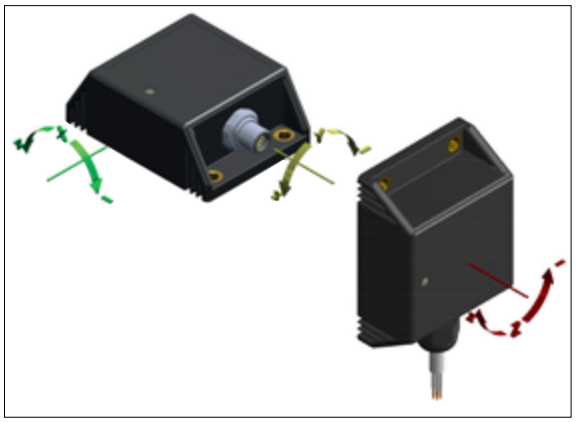

TOP Inclinometer MEMS technology.

Top performance, high IP rating, resistance to shock and vibrations, and high electromagnetic compatibility make this sensor suitable for mobile hydraulics applications.

Developed to guarantee a robust, high-performance solution for applications such as agricultural vehicles, earth-moving machines, and hoisting equipment.

TECHNICAL SPECIFICATIONS

Measurement Range
±10° ±15° ±20° ±30° ±45° ±60° ±85° (single Z axis for analog output - XY dual axis) 360° (±180°) only for single Z axis
Supply voltage
+5Vdc (only for 0.5..4.5Vdc output); +10…+36VDC (see output signal for right supply voltage)
Output signal
0.5...4.5V RATIOMETRIC (supply +5Vdc); 0.5...4.5V; 0...10V; 4...20mA; CANopen
Electrical connections
M12 connector output; cable output
Resolution
Analog output: 0.01° (from ±10° to ±20°); 0.02°(±30°); 0.03°(±45°); 0 .04°(±60°); 0.05°(±85°); 0.1° (±180°). CANopen output: 0.01°
Linearity
< ± 0.15% FS (from ±15° to ± 60°; ±180°); < ± 0.3% FS (± 85°)
Working temperature and Coefficient of temperature
-40°C ... +85°C thermal drift < 0.005°/°C in range (T=-10°C..+60°C) otherwise < 0.008°/°C
Vibrations
20g between 10 Hz … 2000 Hz IEC 60068-2-6
Shock
Pulse on 3 axes; 50g 11 ms IEC 60068-2-27
Electromagnetic compatibility
2014/30/EU Electromagnetic Compatibility (EMC)
IP Protection Level
M12 connector output (IP67); cable output (IP X9K)
Housing body
PBT

MECHANICAL DIMENSIONS

M12 VERSION

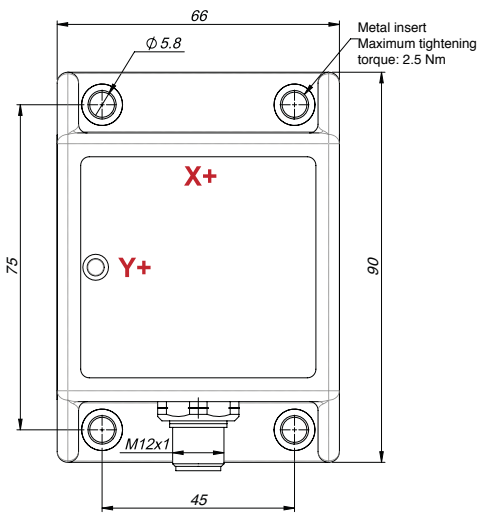

CABLE VERSION

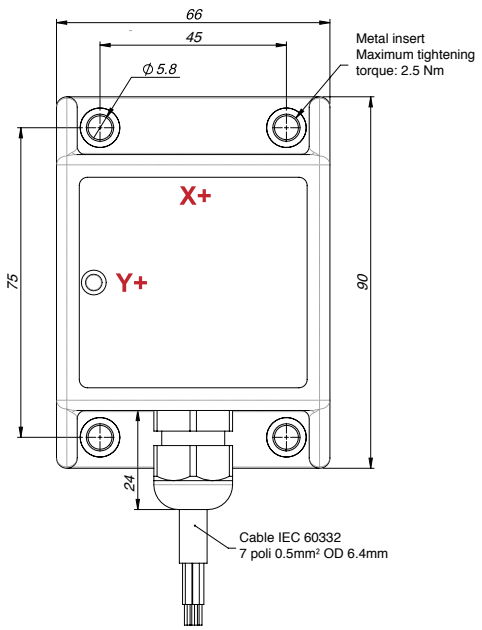

ELECTRICAL CONNECTIONS

M12 VERSION

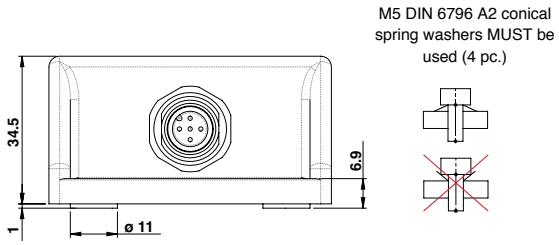

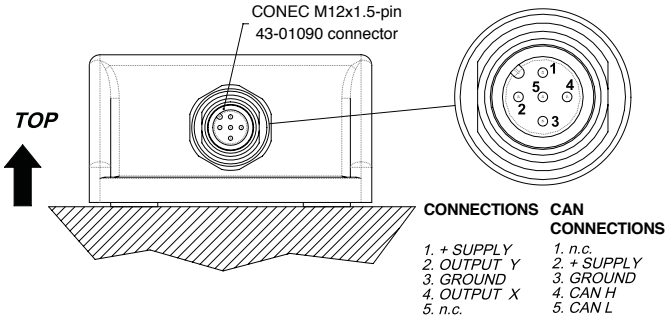

DUAL AXIS

SINGLE AXIS

CABLE VERSION

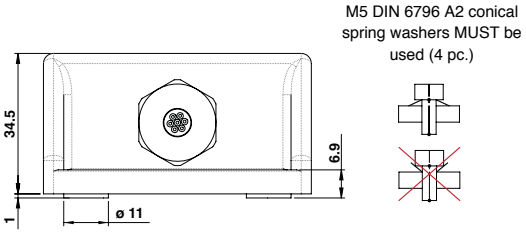

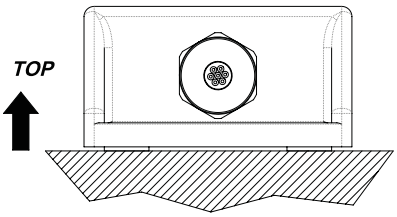

CONNECTIONS

1. WHITE	+ SUPPLY
2. YELLOW	GROUND
3. GREY	OUTPUT X
4. BLUE	OUTPUT Y
5. PINK	n.c.
6. GREEN	n.c.
7. BROWN	n.c.

CAN CONNECTIONS

1. WHITE	+ SUPPLY
2. YELLOW	GROUND
3. GREY	CAN H
4. BLUE	CAN L
5. PINK	n.c.
6. GREEN	n.c.
7. BROWN	n.c.

DUAL AXIS

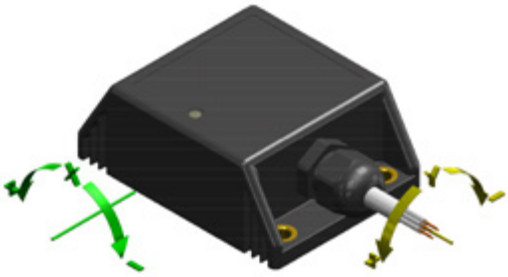

SINGLE AXIS

ITEMS MARKED “n.c.” SHOULD NOT BE CONNECTED

AUTOZERO FUNCTION (additional function)

Available for analog versions in GIT-XY configuration (dual axis)

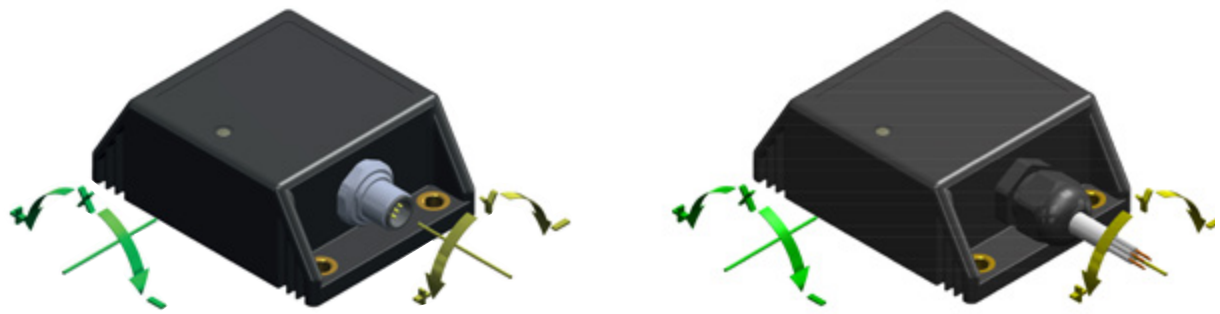

To activate **the Autozero function** make sure that:
- sensor is powered
- fixing surface is free of dust or grease
- sensor is fixed on the horizontal plane with suitable screws

ATTENTION!
The Autozero function can be defined **within a maximum range of +/- 4.5°** from the original zero position (factory set).

Hold the **magnetic pen** ① (accessory to order-PKIT312) to the **ZERO POINT** ◎ ZERO indicated on the product label ②.
Hold the position for **at least 3-5 seconds** so that the operation is successful.

①

②

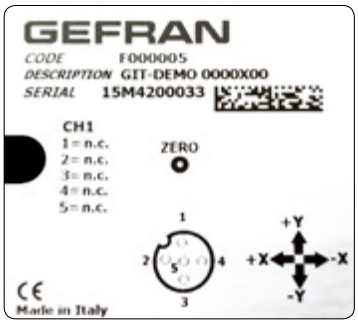

OPERATING SPECIFICATIONS: OUTPUT SIGNAL GRAPHS

DUAL AXIS INCLINOMETER (XY) – X AXIS

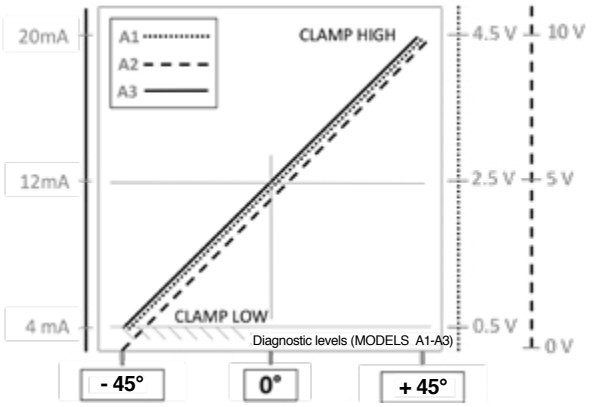

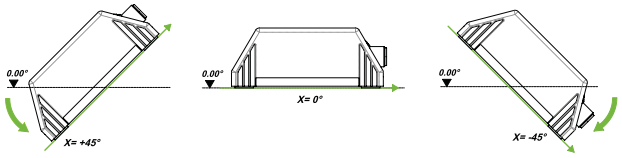

DUAL AXIS INCLINOMETER (XY) – Y AXIS

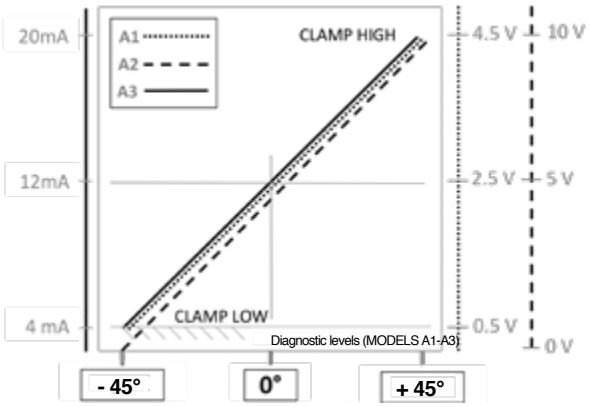

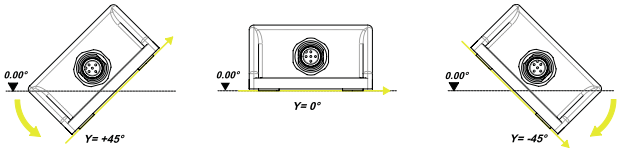

SINGLE AXIS INCLINOMETER (±180°) – Z AXIS

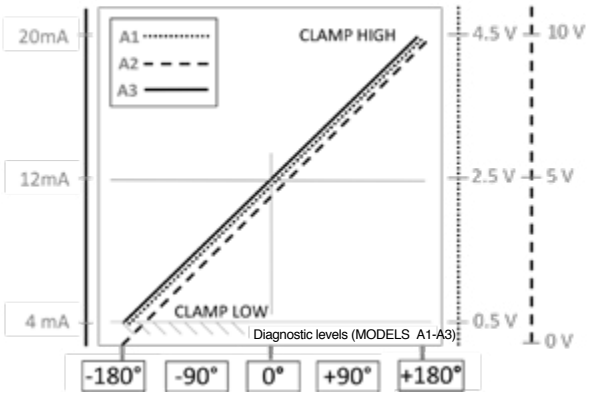

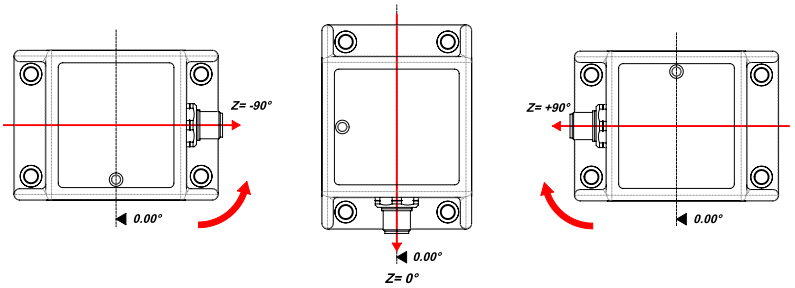

LOAD CONDITIONS

+0.5Vdc...+4.5 Vdc output with power +10...36Vdc and +0..10Vdc output with power +11..36Vdc: apply a load resistance > 100Kohm

+0.5VDC…+4.5VDC output (powered at +5VDC): apply a load resistance > 10Kohm

4..20mA output (powered at < + 15..36Vdc): maximum allowed load resistance is 200 ohm

4..20mA output (powered at >+ 15..36Vdc): maximum allowed load resistance is 500 ohm

ORDERING CODE

ELECTRICAL CONNECTIONS	
M12 connector output	**M**
Cable output (specify cable length)	**F**

AXIS TYPE	
Dual axis (XY axis)	**O**
Single axis 360° (Z axis)	**V**

CIRCUIT TYPE	
Single	**S**
Redundant	**R**

OUTPUT 1 MEASURING RANGE (output for single circuit)	
measuring range (indicate) ±10° ±15° ±20° ±30° ±45° ±60° ±85° (single Z axis for analog output-XY dual axis); 360° (±180°) only for single Z axis	**XXX**

OUTPUT 2 MEASURING RANGE (only for redundant version)	
measuring range (indicate) ±10° ±15° ±20° ±30° ±45° ±60° ±85° (single Z axis for analog output-XY dual axis); 360° (±180°) only for single Z axis	**XXX**

SUPPLY VOLTAGE	
+5Vdc (only for A1 output)	**L**
+10…+36VDC (see output signal for right supply voltage)	**H**

OUTPUT TYPE	
+0.5...4.5Vdc (available with supply L = ratiometric output and with supply H = 0.5...4.5V output)	**A1**
0...+10VDC (powered at +11..36VDC)	**A2**
4...20mA output (powered at +10..36VDC)	**A3**
CANopen output (powered at +10...36VDC)	**C1**

CABLE	
Cable without connector (always “0” in case of GIT-M version)	**0**

CERTIFICATES	
0	No certificate enclosed
L	Linearity curve enclosed

ACCESSORIES	
X	No accessory
Y	Magnetic pen **(PKIT312)**

CABLE LENGTH	
01	100 mm cable
02	200 mm cable
05	500 mm cable
10	1m cable
20	2m cable
.....	other lengths on request

EXAMPLE OF DESCRIPTION: GITFOS030000HA30 0000X01

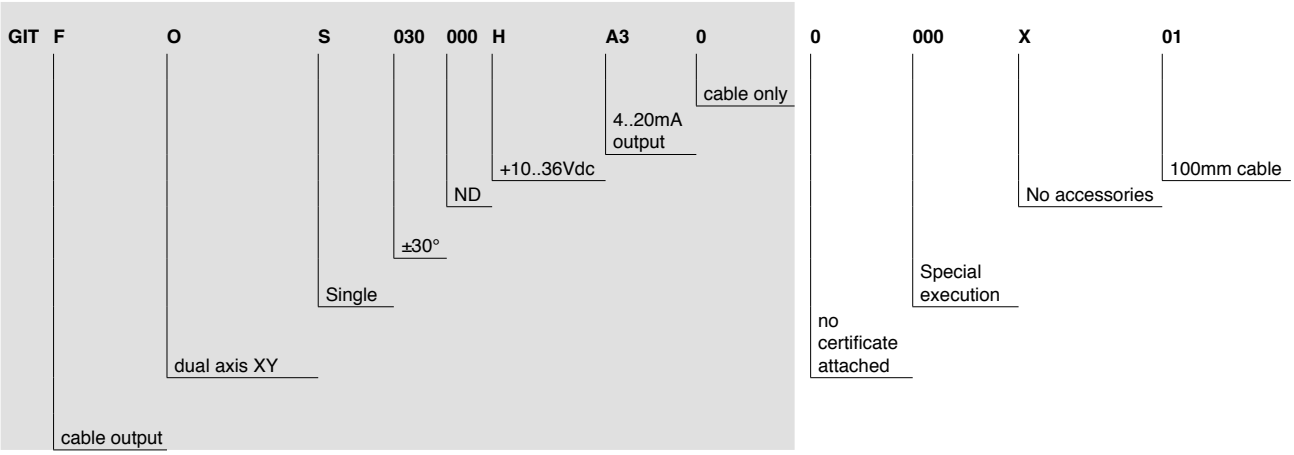

GEFRAN spa reserves the right to make any kind of design or functional modification at any moment without prior notice.

GEFRAN spa
via Sebina, 74
25050 PROVAGLIO D’ISEO (BS) - ITALIA
tel. 0309888.1 - fax. 0309839063
Internet: http://www.gefran.com

GEFRAN